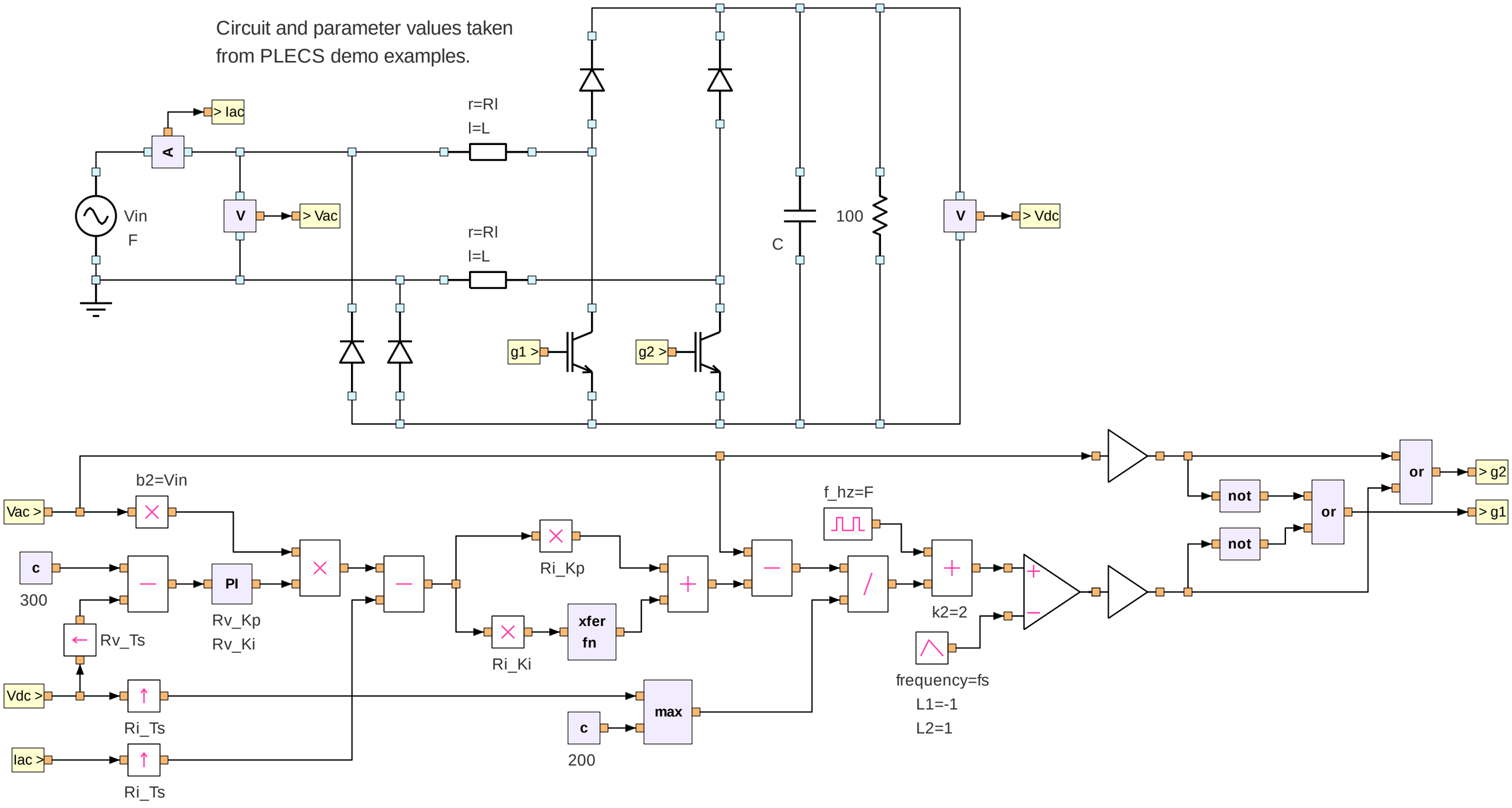Circuit and parameter values taken from PLECS demo examples.